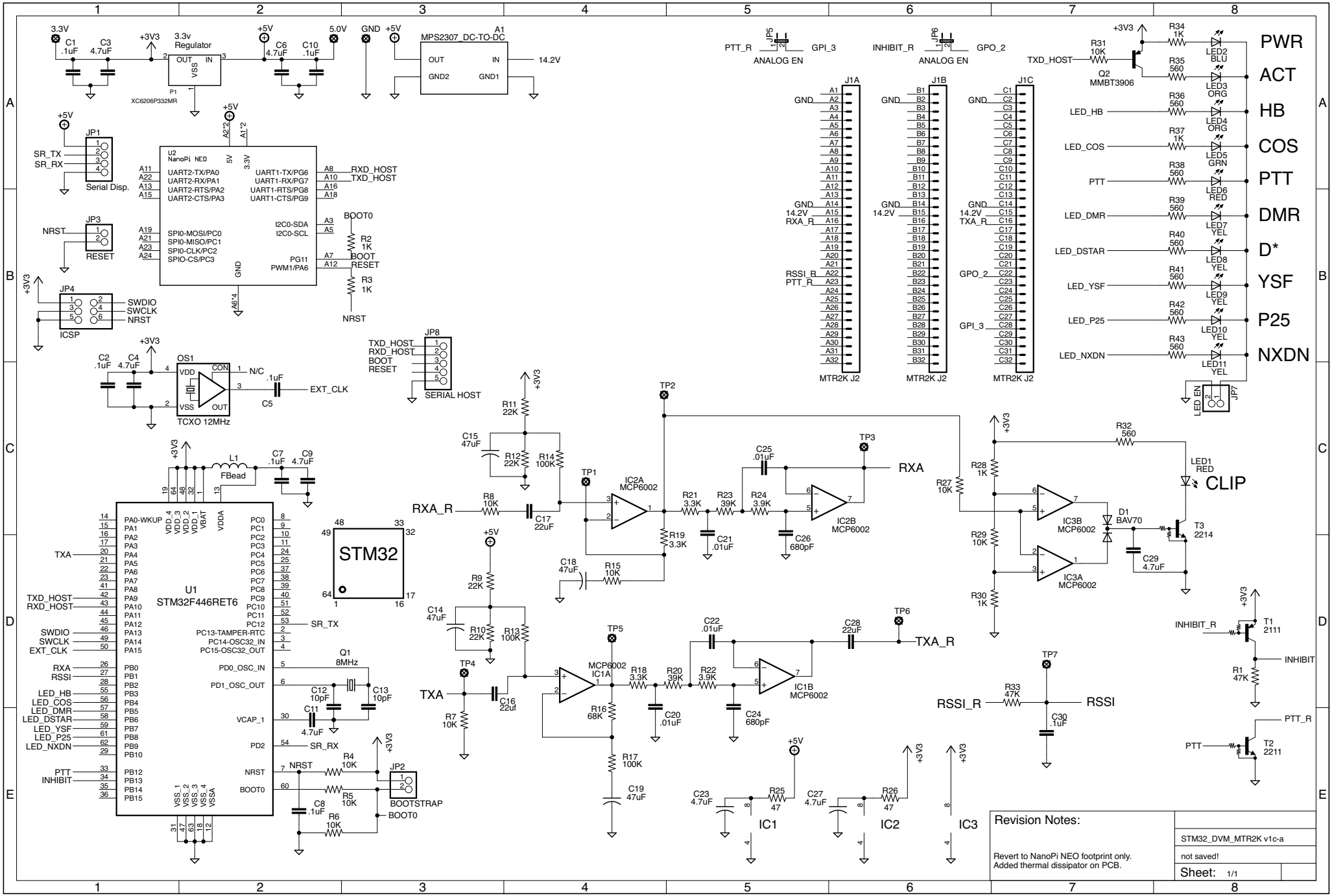

7/30/19 1:08 PM f=0.70 /Users/cort/Dropbox/Electronics/Boards & Schematics/STM32_DVM_MTR2K v1c-a/STM32_DVM_MTR2K v1c-a.sch (Sheet: 1/1)